ResearchGate

See discussions, stats, and author profiles for this publication at: https://www.researchgate.net/publication/235666943

Analysis of Sealing Methods for FDM-fabricated Parts

Article · January 2011

CITATIONS
5

READS
404

8 authors, including:

David Espalin
University of Texas at El Paso
36 PUBLICATIONS **327** CITATIONS

SEE PROFILE

Francisco Medina
Edison Welding Institute, Inc.
122 PUBLICATIONS **2,058** CITATIONS

SEE PROFILE

All content following this page was uploaded by Francisco Medina on 10 February 2014.

The user has requested enhancement of the downloaded file.

Analysis of Sealing Methods for FDM-fabricated Parts

Jorge Mireles[1], Arturo Adame[1], David Espalin[1], Francisco Medina[1],Rob Winker[2], Terry Hoppe[2], Bob Zinniel[2], and Ryan Wicker[1]

1. W.M. Keck Center for 3D Innovation, The University of Texas at El Paso, El Paso, TX
2. Stratasys, Inc., Eden Prairie, MN

REVIEWED, August 17 2011

Abstract

As a result of the layer-by-layer deposition characteristics of Additive Manufacturing (AM) processes, fabricated parts exhibit limiting qualities and have yet to achieve the requirements for end-use applications. Specifically, the use of AM-fabricated parts in fluid pressure applications is limited due to part porosity as well as non-optimized building variables (e.g., build orientation and material properties). In an effort to extend the use of AM in more applications involving fluid pressure, parts manufactured with Fused Deposition Modeling (FDM) were sealed with a variety of sealants and tested under applied pressure. Eleven sealants with diverse chemical properties were applied to multiple geometries of FDM-fabricated pressure caps through brushing or vacuum infiltration. The caps were installed on pressure vessels and subsequently tested while safety precautions were taken to avoid catastrophic failure (i.e., exploding) caused by pressure differentials. Results of the testing provides a sealing method using BJB TC-1614 that enables FDM-fabricated parts to withstand pressures up to ~276 kPa (40psi) through brushing and ~138 kPa (20 psi) through vacuum infiltration. Other noteworthy sealants (Minwax Sanding Sealer, Minwax Polyurethane Oil Based, PRO Finisher Water-Base Polyurethane) that are readily available to consumers and easy to apply (i.e. no mixing ratios to follow, long working times) also had notable results by withstanding pressures up to ~207 kPa (30 psi). In addition, an analysis on dimensional changes was performed to determine the absolute difference between as-built and surface-treated parts. Parts that were infiltrated with BJB TC-1614 showed less dimensional changes (average absolute change of 0.104 mm) than parts that were brushed (average absolute change of 0.231 mm) however one-part sealants had smaller dimensional changes (maximum absolute change for one-part sealants of 0.065 mm for infiltration and 0.171 for brushing) with noteworthy results in pressure testing. Benefits of filling voids within FDM-manufactured parts enables end-use applications such as hermetic housings for biomedical devices and pipes/covers for thermodynamic systems such as heat exchangers.

1 Introduction

Fused Deposition Modeling (FDM), developed by Stratasys, Inc. (Eden Prairie, MN), is a solid freeform fabrication or Additive Manufacturing (AM) technology that can potentially build end-use parts through the deposition of materials layer-by-layer without the need for part-specific tooling or molds, which reduces the cost and lead-time for low-volume production. Production-grade thermoplastic materials such as acrylonitrile butadiene styrene (ABS), methyl methacrylate acrylonitrile-butadine styrene (ABSi), polyphenylsulfone (PPSF), polycarbonate (PC), and other blends of ABS (ABS-M30, ABS-M30i, ABS Plus, PC-ABS) are available for use with FDM technology [Chua *et al*., 2003]. Parts produced by an FDM 400mc (Stratasys, Inc., Eden Prairie, MN) exhibit an accuracy of ±0.127 mm (0.005 inch) which is useful for building high resolution parts [Chua *et al*., 2003]. Although FDM technology has been used in a variety of end-use part applications [Wohlers, 2005], parts produced by FDM cannot be used in

fluid pressure applications because they are generally porous [Agarwala *et al*., 1996; Bellini *et al*., 2004]. In addition, the FDM building process produces moderately strong bonds between layers; however, voids at these locations poses a safety hazard. That is, parts exposed to elevated fluid pressures can give rise to a pressure differential and produce catastrophic failures (e.g., exploding).

Sealing of FDM parts is useful in applications such as low pressure heat exchangers (100-150 kPa) for air dehumidification and waster recovery [Kuppan, 2000], hermetic housings for biomedical devices such as difibrillators or pacemaker [Nagl and Lechleitner, 2005] as well as some advanced applications for low pressure tanks that are resistant to impact and are able to withstand corrosive environments [Koppert and Beukers, 2000; Rashilla, 1993]. Implementing FDM-manufactured parts in such applications requires a post-process that eliminates voids and reinforces the bonds of FDM layers to produce an impermeable, end-use part with reduced safety hazards.

Sealing options (brushing, solvent dipping, infiltration, raster modifications, vapor smoothing, dipping, and painting) have been used to seal parts with apparent porosities useful in applications of high strength and where wear-resistant surfaces are needed [Bunshah, 1994, Lee *et al*., 2004]. Previous research has shown vapor smoothing to improve surface finish of FDM-manufactured parts, and although work needs to be conducted to investigate its efficacy for sealing, vapor smoothing does not appear to affect part dimensions (mean difference between after and before smoothing of 0.028 mm) [Espalin *et al.*, 2009]. Another method used for sealing is vacuum infiltration wherein a porous part is exposed to a fluid in a vacuum allowing the fluid to fill the pores within the part. Manufacturing facilities not equipped with vacuum chambers may implement a simple brushing method to directly apply sealants by using foam or bristled brushes.

In this study, two sealant application methods (vacuum infiltration and brushing of sealants) and eleven sealants were explored to fill air gaps left by the FDM manufacturing process. Experiments were conducted to determine if the post-process enhanced the FDM-manufactured parts to further allow for fluid pressure applications while minimizing dimensional changes caused by the sealant and/or application method. Protocols developed in this study can be used as guidelines at the manufacturing level and results can aid FDM users in properly selecting a sealant/infiltrant.

2 Materials

ABS-M30 (Stratasys, Eden Prairie, MN), was used with an FDM 400mc system to produce test parts described in section 3. ABS-M30 is a popular option for consumers because of its increased strength compared to regular ABS (25-70% stronger) and its range of available colors (ivory, white, black, dark grey, red, blue) [Chua *et al.,* 2003; Wohlers, 2011]. Various sealant materials were used and are described in Table 1.

3 Methods

3.1 Design of multi-feature test part

Pressure caps and vessels are designed to hold fluids at pressures different than atmospheric pressure. Design of pressure vessels and caps vary and common shapes include spheres and cylinders [Spence *et al.*, 1994] which were included in the multi-feature test part for this study. Prominent features that were implemented included cylindrical pressure vessels and

Table 1: Densities of tested sealants and typical applications

Sealant	Density (g/cm^3)	Typical Applications
DEFT Clear Brushing Lacquer	0.90	Finish for interior wood surfaces.
IPS Weld-On 3 Cement	1.33	Cementing acrylic and other plastics; used in display items, containers, house wares, etc.
Minwax Sanding Sealer	0.85	Seals interior wood surfaces.
Minwax Oil Base Polyurethane	0.86	Protects interior wood surfaces.
PRO Finisher Water-Base Polyurethane	1.00	Coating hardwood floors and other interior wood surfaces.
Thompson's Multi-Surface Waterproofer	0.81	Protects and seals wood, brick and concrete.
BJB TC-1614 A/B	1.14	Seals porous to semi-porous material surfaces like plaster, wood, graphite and SLS models.
Hysol E-30CL	1.10	Bonding, small potting, laminating glass, ceramics, metals, and plastics.
Stycast W19 + Catalyst 9	1.09	Impregnates wrapped coils; small device potting; surface coating.
West Marine Penetrating Epoxy	0.93	Seals dry-rotted wood: repair transoms, decking, stringers and molding.
West System 105 Resin + 209 Hardener epoxy	1.15	Coating and bonding applications in extremely warm and/or humid conditions for fiberglass, composite materials, and a variety of metals.

their end caps, 90 degree elbows, and other design options such as square pressure containers and semi-cylindrical features. The final design of the multi-feature test part is portrayed in Figure 1 and includes an example application for each feature.

Variable feature thicknesses were used to evaluate the effect of sealant permeability on part performance during pressure testing. A detailed view of the multi-feature test part and its corresponding thicknesses is portrayed in Figure 2.

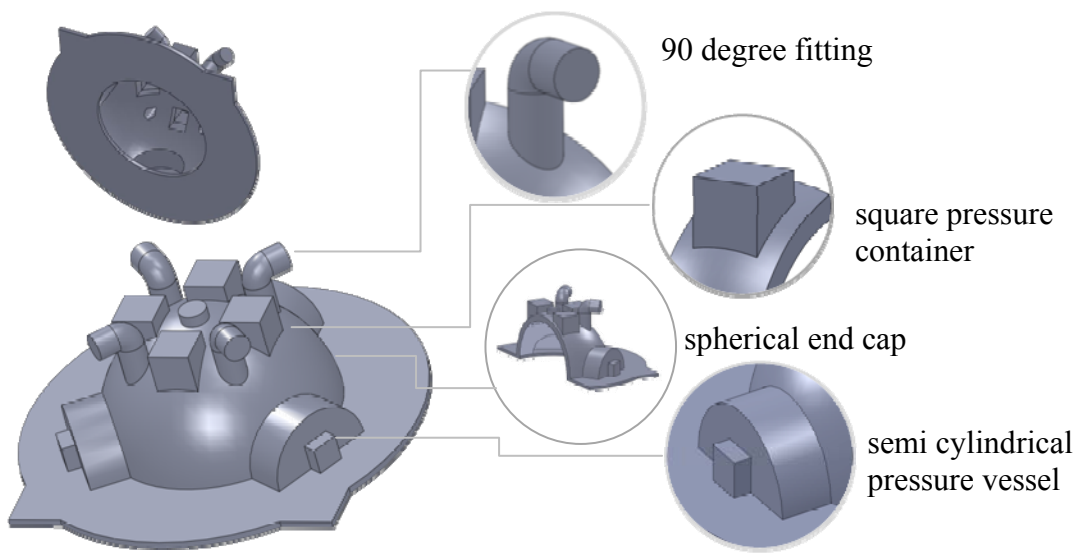

Figure 1: Multi-feature test part design

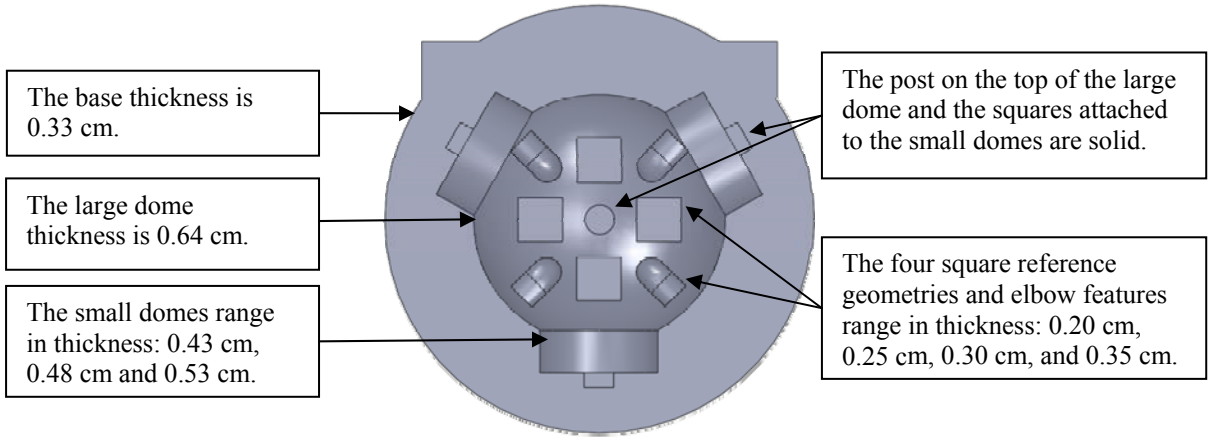

Figure 2: Top view of multi-feature test part thicknesses

3.2 Vacuum Infiltration

Test parts were submerged in the sealant and exposed to a vacuum environment (0.375 torr) as shown in Figure 3 via an MCP 4/04 vacuum casting system (MTT Technologies Ltd., Whitebridge Way, Whitebridge Park, England). All tests and application of sealants were performed at ambient room temperature. Vacuum infiltration is a process which consumes a large portion of infiltrant depending on part size and area of infiltration. To avoid material waste, the manufacturer-recommended sealant work times and mixing ratios were used. An infiltration study was performed on small test specimens (76.20 X 19.05 X 3.18 mm) and their cross-sections were observed through the use of a stereo microscope to verify the part was being infiltrated with each sealant. Based on this initial infiltration study, candidate sealants were identified for vacuum infiltration of the multi-feature test part in Figure 1. These sealants included Minwax Sanding Sealer, Polyurethane Oil Based, BJB TC-1614 epoxy, Stycast W19 + Catalyst 9 epoxy, and West System 109 + 209 Hardener epoxy.

A separate infiltration study was performed on 2.54 cm cubes whereby each cube was submerged in the infiltrant and exposed to a vacuum for durations of 1, 3, and 6 minutes. The aim of this study was to determine the time required to infiltrate each test part by using the following rate of infiltration equation [Zhou *et al*., 2004]

$$t = \frac{V_p}{X}$$

where t is the time (s) for total infiltration, V_p is the volume of porosity (cm^3), and X is the rate of infiltration (cm^3/min) of the sealant into the FDM part. The volume of porosity, V_p, was calculated by determining the difference in mass between the CAD model, or ideal test part with no porosity, and the actual test part. For the CAD model, the mass was calculated by multiplying the volume of the part (given by SolidWorks CAD software) by the density of the material, ABS-M30 (1.04 g/cm^3) [Wohlers, 2011].

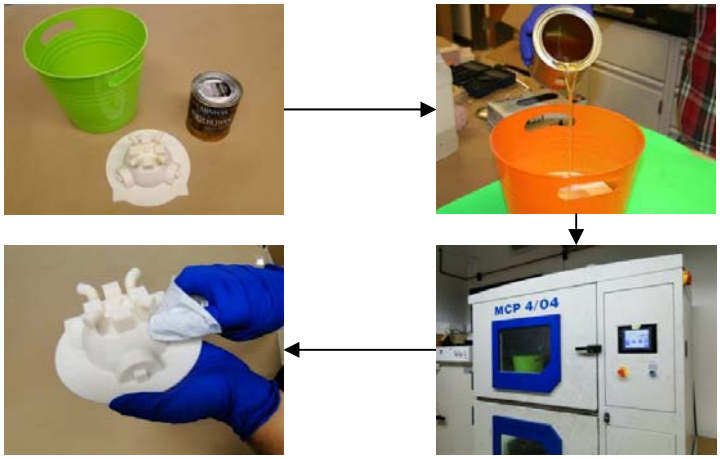

Figure 3: Infiltration Procedure

The mass of porosity, m_p was calculated by subtracting the mass of the real part from the mass of the ideal part. Finally, the volume of porosity was calculated by using the following:

$$V_p = \frac{m_p}{\rho}$$

After determining the total infiltration time, the multi-feature test part was vacuum infiltrated (Figure 3) for the calculated total infiltration.

3.4 Brushing

A brushing method was tested that can be implemented by consumers with limited resources in which vacuum infiltration is not possible. Foam brushes were used over bristled brushes because they produce parts with better esthetics and minimized dimensional changes while also being able to absorb excess material where needed. Brushing was performed on the entire surface of the multi-feature test part with all 11 sealants. As noted in Figure 4, sealants can be classified as a one-part sealant (Minwax Sanding Sealer, Thompson's WaterSeal, Polyurethane Oil Base, Polyurethane Water Base, DEFT Clear Wood Finish lacquer, IPS Weld-On 3 Cement), two-part epoxy (BJB TC-1614 epoxy, Stycast W19 + Catalyst 9 epoxy, West Marine penetrating epoxy, West System 109 + 209 Hardener epoxy), or a special case such as Hysol E-30HP which is a two-part epoxy that can be used directly with a mixing nozzle.

3.2 Testing for dimensional changes and performance under fluid pressure

Dimensional changes of the test part were evaluated by using a SmartScope Flash 250 coordinate measuring machine (Optical Gauging Products, Inc., Rochester, NY) to measure selected features before and after sealants were applied. A fixture (Figure 5) was fabricated to enable quick and easy registration of the parts so that accurate and repeatable measurements could be obtained. Vertical and horizontal locations along the top of the multi-feature test part were measured and include 33 total measurements.

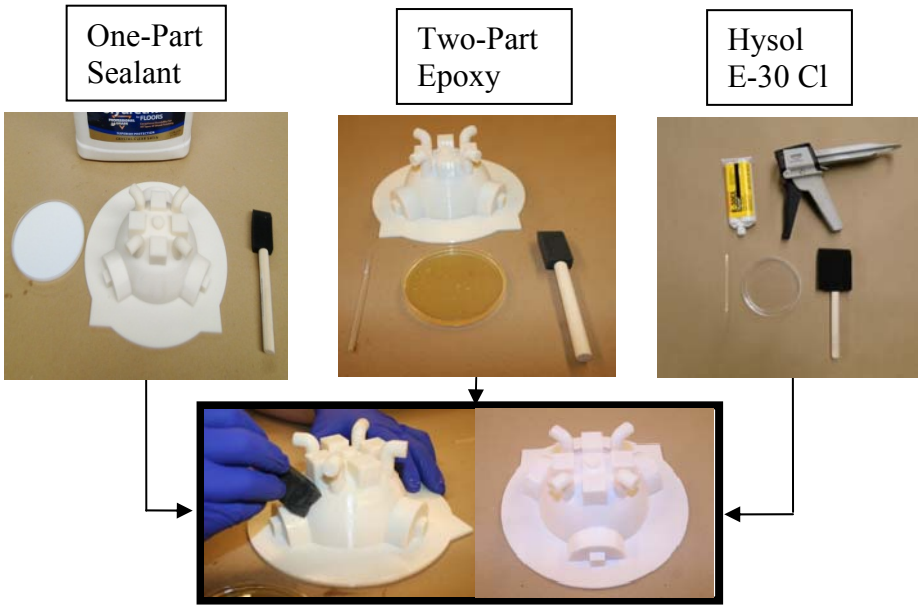

Figure 4: Brushing application procedure

An aluminium-6061 test fixture (Figure 6) was manufactured using a HAAS Super Mini Mill 2 Computer Numerical Control system (Haas Automation, Inc., Oxnard, California). The fixture, along with the surface treated test part, was submerged in water and attached to a compressed air source that supplied a prescribed pressure at a rate of 6.9 kPa/min (1psi/min) and held at 276 kPa (40 psi) for at least 5 minutes. Safety concerns pertaining to a catastrophic failure due to the pressure differential were taken into account by applying the above mentioned pressure rate. A failed test part or feature was denoted by leaking and air bubble formation. Conversely, a successful test part or feature was denoted by the lack of bubble formation and a confirmation test was performed the next day to ensure the part's sealed conditions remained unchanged.

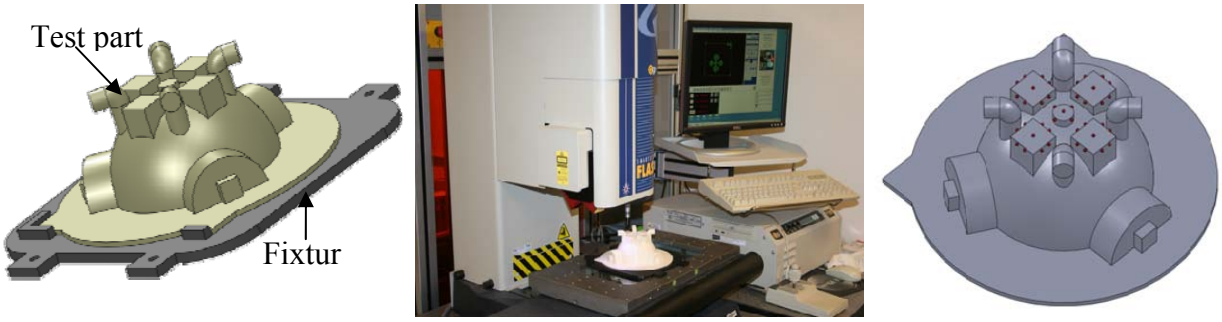

Figure 5: Coordinate measuring machine fixture and setup

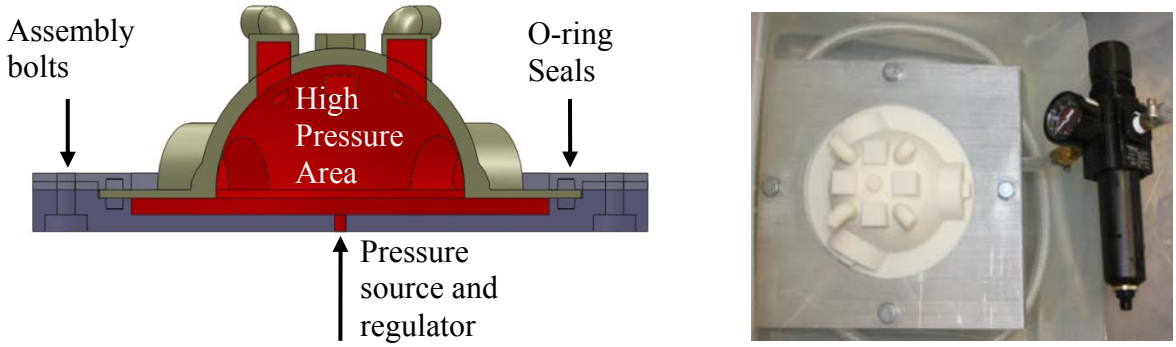

Figure 6: Fixture for pressure testing

4.0 Results

4.1 Vacuum infiltration

The 76.20 by 19.05 by 3.18 mm (3 by 0.75 by 1/8 inch) samples were cut and its cross-section was observed using a stereomicroscope as seen in Figure 7. A successful infiltration of the small test part was noted by the lack of the FDM material beads as in Figure 7 c, e, f, h, and i. Conversely, unsuccessful or partial infiltration was noted when FDM material beads were clearly evident as in Figure 7 b, d, and g. Polyurethane Water based sealer was not tested for infiltration due to its freezing behavior under vacuum caused by its chemical composition. Hysol E-30CL was also not tested for infiltration due to its high viscosity

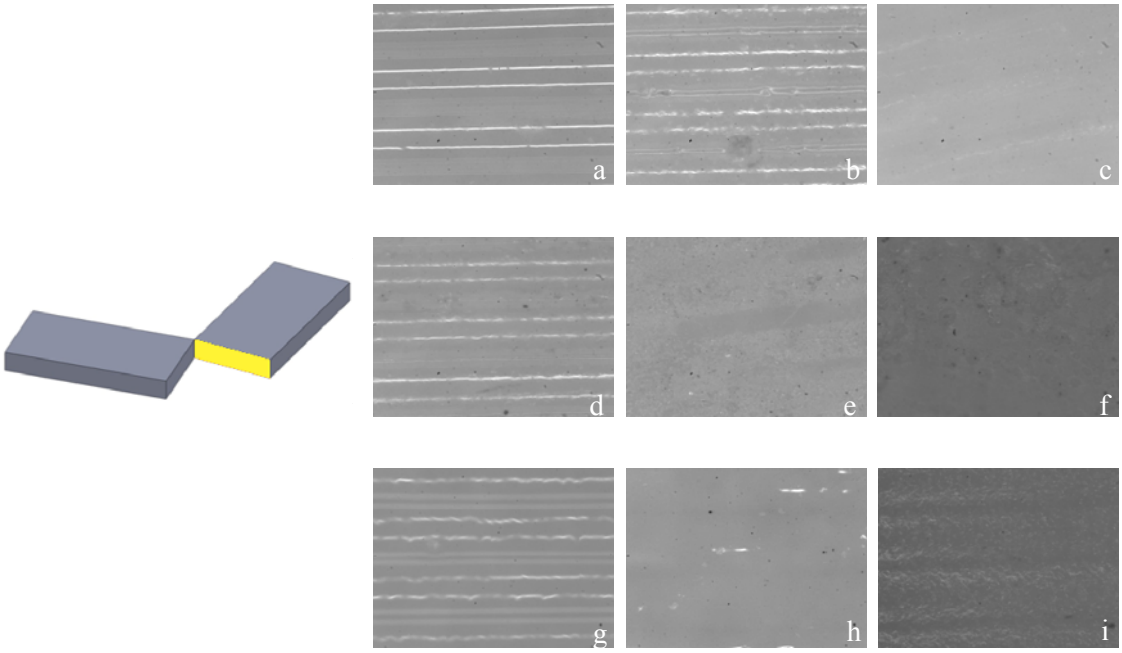

Figure 7: Cross-sectional view of vacuum infiltrated test parts, a) No infiltration (benchmark), b) Thompson's WaterSeal Multi-Surface Waterproofer, c) Minwax Sanding Sealer, d) DEFTClear Brushing Lacquer, e) BJB TC-1614 A/B, f) Stycast W19+Catalyst 9, g) West Marine Penetrating Epoxy, h) West System 105 Resin+209 Hardener epoxy, i) Minwax Oil Based Polyurethane (note that c, e, f, h, and i show evidence of infiltration)

(10,500 cP). Finally, IPS Weld-on 3 was not used as an infiltrant in this study due to its fast drying time (1 min), but is suggested for other application methods like dipping. Based on the results from Figure 7, the infiltration time was determined for the following candidate infiltrants: Minwax Sanding Sealer, Polyurethane Oil Based, BJB TC-1614 epoxy, Stycast W19 + Catalyst 9 epoxy, and West System 109 + 209 Hardener epoxy.

Volume of porosity for the multi-feature test part was found to be 11.51 cm^3, corresponding to 5.96% of the total volume (202.17 cm^3). The rate of infiltration, *X*, varied according to the density and viscosity of each sealant. The time required to infiltrate the cubic test parts is described in Table 2.

4.2 Performance under fluid pressure

Figure 8 presents the performance of each sealant/infiltrant with the corresponding application method. Pressures of 138 – 207 kPa were withstood when two coats were brushed using Polyurethane Oil Base, Polyurethane Water Base, Minwax Sanding Sealer, Stycast W19 + Catalyst 9 epoxy, or West System 105 + 209 Hardener. This pressure range was also achieved with the vacuum infiltration of BJB TC-1614. The maximum tested pressure, 276 kPa, was withstood by the multi-feature test part when brushed with two coats of BJB TC-1614. It is worth noting that the average dimensional change for brushing two coats of BJB TC-1614 was 0.231 mm.

As previously mentioned, a failed test part or feature was denoted by leaking and air bubble formation. To ensure safe testing conditions, none of the parts were allowed to experience catastrophic failure (i.e., exploding). The majority of failure sites for the multi-feature test part included locations where geometry changes occurred (e.g., a flat surface transitioned to a round surface). Figure 9 shows the formation of bubbles at multiple locations where dissimilar surfaces intersect. Future work can include the incorporation of a fillet feature at such intersections made from a sealant such as epoxy. Since most failures occurred randomly throughout geometry changes, a definite conclusion cannot be made on whether the feature thicknesses had an influence on the failure of the parts under pressure. Like previous studies, that identify occurrence of stress concentrations at radiused corners due to apparent road discontinuities at such geometric transitions, [Ahn *et al.*, 2002] this study provides evidence of prominent failure occurrence where geometries change drastically.

Table 2: Infiltration times as determined with cubic test parts for each infiltrant

Sealant	Volume of porosity, V_p (cm^3)	Rate of infiltration, X (cm^3/min)	Total infiltration time, T (min)
Minwax Sanding Sealer	11.73	0.62	18.9
Polyurethane Oil-Base	11.73	0.33	35.51
BJB TC-1614	11.73	0.29	40.41
Stycast W19 + Catalyst 9	11.73	0.41	28.59
West System 105 + 209 Hardener	11.73	0.26	45.08

	DEFT Clear Brushing Lacquer	IPS Weld-On 3 Cement	Minwax Sanding Sealer	Minwax Oil Base Polyurethane	PRO Finisher Water-Base Polyurethane	Thompson's WaterSeal Multi-Surface Waterproofer	BJB TC-1614 A/B	Hysol E-30CL	Stycast W19 + Catalyst 9	West Marine Penetrating Epoxy	West System 105 Resin + 209 Hardener epoxy
Brush: 1-Coat	X	X	O	O	O	X	√	X	√	X	O
Brush: 2-Coat	X	X	√√	√√	√√	X	√√√	O	√√	O	√√
Vacuum Infiltration	-	-	X	X	-	-	√√	-	√	-	O

Pressure Held, X=0-34, O=35-69, √=70-138, √√=139-207, √√√=208-276 (kPa)
X=0-5, O=5.1-10, √=10.1-20, √√=20.1-30, √√√=30.1-40 (psi)

Figure 8: Results for performance of multi-feature test part under fluid pressure

4.3 Dimensional changes caused by surface treatment

Through both infiltration and brushing, excess sealant can accumulate at certain features that can significantly alter part dimensions. The following figure shows a summary of the results obtained by the coordinate measuring machine. The average dimensional change is defined as the absolute difference between the non-treated part and the brushed/infiltrated part averaged over 5 features. Overall, parts that were infiltrated showed less dimensional changes (average absolute change of 0.064 mm) than parts that were brushed (average absolute change of 0.073 mm and 0.139 mm when one coat or two coats of sealant were applied, respectively).

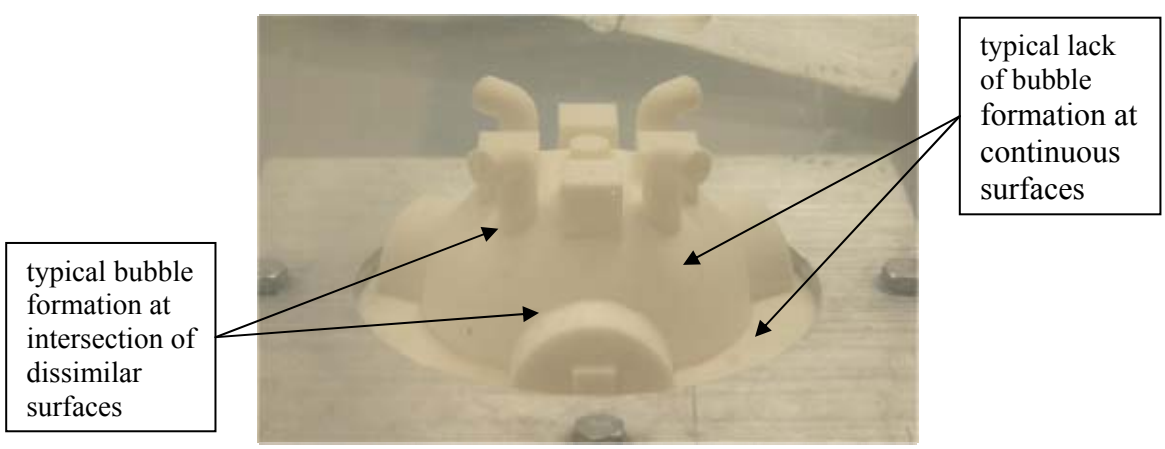

Figure 9: Surface-treated, ABS-M30 part under fluid pressure

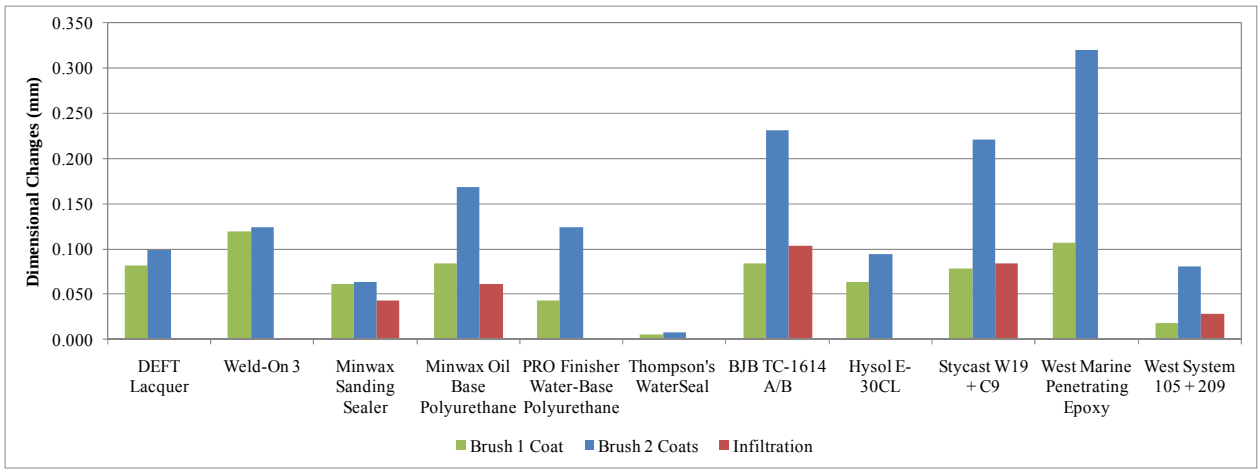

Figure 10: Dimensional changes (note not all materials were vacuum infiltrated)

5 Conclusions

Manufacturing end-use parts using FDM has not been possible for fluid pressure applications due to part porosities, air gaps, and voids. Improving such build defects may allow FDM technology to be used for applications where fluids are applied at low pressures including hermetic housings for biomedical devices such as pacemakers and pipes/covers for thermodynamic systems such as heat exchangers. Vacuum infiltration and brushing were explored with the use of six sealants (DEFT Clear Brushing Lacquer, Minwax Sanding Sealer, Minwax Oil Base Polyurethane, PRO Finisher Water-Base Polyurethane, Thompson's WaterSeal Multi-Surface Waterproofer) that are readily available to consumers at hardware stores and six industrial sealants (IPS Weld-On 3 Cement, BJB TC-1614 A/B, Hysol E-30CL, Stycast W19 + Catalyst 9, West Marine Penetrating Epoxy, West System 105 Resin + 209 Hardener epoxy) that are primarily used by industrial companies for specialized repairs.

In this study, post-processing a multi-feature, FDM test part (made of ABS-M30) with BJB TC-1614 had notable results: individually, brushing and vacuum infiltration allowed the test part to repeatedly hold a fluid pressure for at least 5 minutes at pressures of 276 kPa and 138 kPa, respectively. The mean absolute difference between the non-treated part and the brushed/infiltrated part caused by the application of BJB TC-1614 was minimal (0.231 mm for brushing and 0.104 mm for infiltration). This dimensional change can be controlled through user application during brushing and vacuum infiltration. A chart (Figure 8) was developed that can be used by consumers to select appropriate application techniques corresponding to available sealant options. This study suggests FDM customers can build end-use parts for low pressure applications by applying one of the procedures explored in this research. Ease-of-use needs to be considered as well as sealant cost, drying/working times, aesthetics, as well as envinronmental and health risks when needed. Epoxies were more expensive and their work times need to be followed as compared to one-part sealants such as Minwax Sanding Sealer which is ready to apply and has a long work time. When precaution is taken, all sealants produced desirable aesthetic results however West Marine Penetrating Epoxy had notable accumulation during the drying process and produced unappealing surfaces. Epoxies generally had the greatest change in dimension while one-part sealants had the least with some noteworthy results as seen in Figure10. When a part is to be used rapidly, epoxies dry within 5 hours with notable sealants

like BJB TC1614 that were able to be used after 2 hours, however other noteworthy sealants such as Minwax Sanding Sealer and polyurethanes required at least 24 hours to completely dry making them unsuitable for rapid use and quick processing. Environmental and health risks also need to be taken into consideration as some sealants require special safety precautions during processing (e.g. fume hoods, safety equipment) as well as precautions needed for specific end-use applications (e.g. FDA approved, biomedical). It is to be noted that sealant performance and dimensional changes may vary from user to user. Precautions should be taken when using FDM-manufactured parts in fluid pressure applications as voids may give rise to catastrophic failures such as exploding. FDM consumers may apply multiple coats to seal their FDM parts, however multiple coats was not explored in depth for this study.

Future Work

Although not captured by dimensional measurement data, sealant material tended to accumulate during drying/curing at corners, edges, crevices, and the test part's base. To combat sealant accumulation, a rotary arm can be used to continuously move the part as it dries, giving the final product an even and esthetically appealing surface. Employing this method to achieve evenly distributed surface coatings can allow for multiple sealing coatings while minimizing dimensional changes. Other sealants with different properties can be explored including off the shelf sealants which may be ideal to consumers with short wait times.

In this study, pressure was applied gradually; however, many applications require endurance of instant pressure which should be the focus of future work. Additional work should also determine a sealant's maximum working pressure and lifetime in various conditions such as exposure to ultraviolet light, dry/humid environments, and cyclic fluid pressure loading. For tests involving instantaneous and high fluid pressures, special precautions should be taken since FDM-manufactured parts may fail catastrophically due to voids developed by the build process.

Optimizing FDM-building variables (e.g., build orientation, thermoplastic material, raster modifications, air gaps between rasters and contours) can directly impact part sealing [Thrimurthulu *et al*., 2004] and have shown to directly affect mechanical properties where radiused surfaces are present [Ahn *et al.*, 2002]. Therefore, a design of experiments including multiple factors and levels should be created that determines the influence of the various FDM-building parameters on a part's performance under fluid pressure. Additionally, other promising sealing methods such as electroplating, vapor smoothing, and dipping in solvents may be investigated to determine their efficacy. Ease-of-use needs to be documented as different methods require special processing techniques and hardware making some methods more ideal than others. Optimized building parameters should then be used concurrently with successful sealing/infiltration methods – using a single sealant or a combination of sealant and/or application methods – to fill voids within FDM-manufactured parts that will enable end-use applications in high fluid pressure environments. FDM materials other than ABS-M30 should also be tested to determine if sealing/infiltration behavior and dimensional changes vary due to the thermoplastic composition.

Acknowledgements

The research described in this paper was performed at the W.M. Keck Center for 3D Innovation at the University of Texas at El Paso (UTEP). The Louise Stokes Alliance for Minority Participation provided further funding through grant HRD-0703584 from the National Science Foundation. The findings and opinions presented in this paper are those of the authors and do not necessarily reflect those of the sponsors of this research.

References:

Ahn, S., Montero, M., Odell, D., Roundy, S., Wright P.K., (2002). Anistropic material properties of fused deposition modeling ABS. Rapid Prototyping, 8 (4), pp. 248-257.

Agarwala, M.K., Jamalabad, V.R., Langrana, N.A., Safari, A., Whalen, P.J. and Danforth, S.C., (1996). Structural quality of parts processed by fused deposition. Rapid Prototyping Journal, 2 (4), pp. 4-19.

Bellini, A., Guceri, S., (2003). Mechanical characterization of parts fabricated using fused deposition modeling. Rapid Prototyping Journal, 9 (4), pp. 252-264

Bunshah, R.F., (1994). Handbook of deposition technologies for films and coatings: Science, technology and applications. Westwood, New Jersey, Noyes Publications.

Chua, C.K., Leong, K.F., Lim, C.S., (2003). Rapid prototyping: principles and applications. Singapore, World Scientific Publishing Co.

Espalin, D., Medina, F., Arcaute, K., Zinniel, B., Hoppe, T., Wicker, R., (2009). Effects of Vapor Smoothing on ABS Part Dimensions. Proceedings from Rapid 2009 Conference & Exposition, Schaumburg, IL.

Koppert, J.J., Beukers, A., (2000). Full composite isotensoid pressure vessels or how composites can compete with steel. SAMPE Journal, 36 (6), pp. 8–15.

Kuppan, T., (2000). Heat exchanger design handbook. New York, New York, Marcel Kekker, Inc.

Lee, C.W., Chua, C.K., Cheah, C.M., Tan, L.H., Feng, C., (2004). Rapid investment casting: direct and indirect approaches via fused deposition modeling. Springer, 23, pp. 93-101.

Nagl, M., Lechleitner, T., (2005). Barrier coatings for medical electronic implants. Vakuum in Forschung und Praxis, Supplement: Vacuum's Best, 17 (1), pp. 47-50.

Rashilla, R.J., (1993). All-composite pressure vessels for natural gas vehicle (NGV) fuel tank. Proceedings of the Conference for Advanced Composites Technologies, Dearborn, MI, pp. 8–11.

Spence, J., Tooth, A.S., (1994). Pressure vessel design: concepts and principles, London, SE1 8HN, UK, Chapman & Hall.

Thrimurthulu, K., Pandey, P.M., Reddy, N.V., (2004). Optimum part deposition orientation in fused deposition modeling. International Journal of Machine Tools and Manufacture, 44, pp. 585-594.

Wohlers, T., (2005). New trends and development in additive fabrication. In Bartolo, P.J. (Eds.), Virual Modeling and Rapid Manufacturing (pp. 3-5), Leiden, The Netherlands: Taylor & Francis/Balkema.

Wohlers, T., (2011). Appendices: Direct Appendix E: Material properties. Wohlers Report 2011: State of the Industry. Fort Collins, CO: Wohlers Associates.

Zhou, J.G., Kokkengada, M., He, Z., Kim, Y.S., Tseng, A.A., (2004). Low temperature polymer infiltration for rapid tooling. Materials and Design, 25 (2), pp. 145-154.

View publication stats